HYDRAULIC CYLINDERS

MEGA

CSE Series

Flat cylinders

Single-acting, spring-return

Working pressure: 700 kg/cm²/10.000 psi.

All pistons have a salt bath nitriding treatment to resist corrosion.

Grooved piston ends make optional grooved saddle unnecessary.

All are equipped with high flow female quick couplers with dust cap, ref A-5507-H, except model CSE-5 fitted with a female quick coupler, ref. A-5506-H.

With mounting holes in the base.

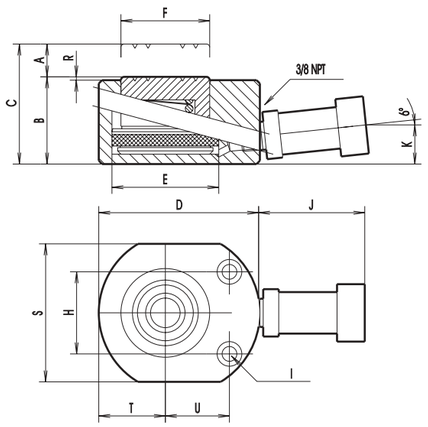

These CSE cylinders have been designed to combine minimum collapsed height with optimum stroke.

They are suitable for lifting, clamping, levelling or positioning jobs where space is tight.

The spring return piston allows easy removal from working place.

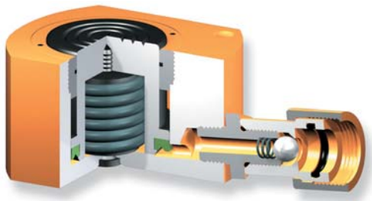

Cross section view

Nominal capacity	Ref.	Stroke A		Maximum capacity	Effective area		Dimensioes mm/in.																								Oil volume		Weight	
							B		C		D		E		F		H		I		J		K		R		S		T		U			
tn		mm.	in.	kN	cm²	in²																									cm³	in³	Kg.	lbs.
5	CSE-5	6,5	1/4	48,5	7,06	1,09	34	1 3/8	40,5	1 19/32	60	2 11/32	30	1 3/16	26	1 1/32	28	1 3/32	5,5	7/32	60	2 11/32	17	11/16	1	3/64	41	1 5/8	20	13/16	22	7/8	5	0,77	0,75	1,65
11	CSE-11	11	7/16	109,1	15,9	2,46	44,5	1 3/4	55,5	2 3/16	79	3 1/8	45	1 49/64	39	1 17/32	37	1 29/64	6,6	1/4	70	2 3/4	23	15/16	1	3/64	56	2 13/64	28	1 1/64	34	1 5/16	18	2,8	1,75	3,85
23	CSE-23	11	7/16	227,7	33,08	5,12	54	2 1/8	65	2 9/16	98	3 7/8	65	2 9/16	54	2 1/8	50	2	9	23/64	70	2 3/4	23	15/16	1	3/64	80	3 1/8	40	1 9/16	37	1 7/16	37	5,73	3,2	7,05
31	CSE-31	12	15/32	303,1	44,18	6,84	60	2 11/32	72	2 27/32	115	4 17/32	75	2 61/64	57,15	2 1/4	52	2 3/64	9	23/64	70	2 3/4	23	15/16	1	3/64	94	3 11/16	47	1 13/16	44	1 3/4	53	8,2	4,8	10,5
55	CSE-55	16	5/8	539	78.54	12,17	72	2 27/32	88	3 15/32	147	5 25/32	100	3 15/16	80	3 6/32	70	2 3/4	11	7/16	70	2 3/4	23	15/16	1	3/64	124	4 7/8	62	2 7/16	58	2 5/16	125	19.4	9,4	20,7
93	CSE-93	16	5/8	910,9	132,73	20,57	88	3 15/32	104	4 3/32	180	7 3/32	130	5 1/64	105	4 9/64	76	3	14	9/16	70	2 3/4	23	15/16	1	3/64	160	6 5/16	80	3 1/8	75	2 15/16	212	32,8	17,2	37,9

HYDRAULIC CYLINDERS

CTN Series

Pulling cylinders

Single-acting, spring return

Working pressure: 700 kg/cm²/10.000 psi.

All pistons have a hard chrome plating treatment to resist corrosion.

Equipped with high flow female quick coupler with dust cap, ref. A-5507-H and carrying handle.

Designed for pulling and tensioning applications, they can be used in those operations where two heavy pieces have to be put one near the other.

They are normally used in industrial assembling, testing, welding operations of plates or heavy steel frame works.

They are fitted with clevis eyes on both ends which are linked to attachments welded onto the plates to join or weld.

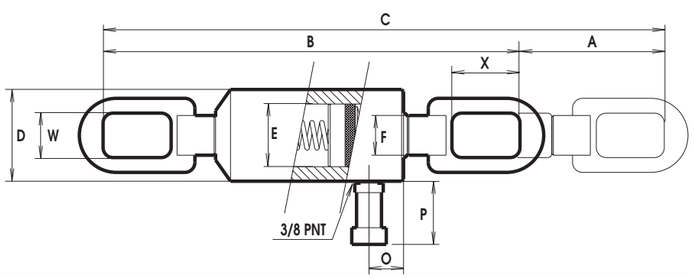

Nominal capacity	Ref.	Stroke A		Maximum capacity	Effective area		Dimensions mm/in.																		Oil volume		Weight	
							B		C		D		E		F		O		P		W		X					
tn		mm.	in.	kN	cm²	in²																			cm³	in³	Kg.	lbs.
10	CTN-10	127	5	98,95	14,42	2,23	475	18 11/16	625	24 9/16	85	3 11/32	60	2 11/32	42	1 21/32	35	1 3/8	70	2 3/4	40	1 9/16	75	2 15/16	183	11,15	9,6	21,1
30	CTN-30	150	5 15/16	331,8	48,34	7,49	625	24 9/16	775	30 1/2	125	4 15/16	100	3 15/16	62	2 7/16	40	1 9/16	70	2 3/4	50	2	100	3 15/16	725	44,3	22,1	48,6
50	CTN-50	150	5 15/16	497,2	72,45	11,23	770	30 5/16	920	36 7/32	155	6 1/8	125	4 15/16	80	3 6/32	44	1 3/4	70	2 3/4	60	2 11/32	150	5 15/16	1085	66,2	37	81,4